Signature	Revision History	Date	Rev.
N.XU	For Bulk Production	Nov.07,07	01

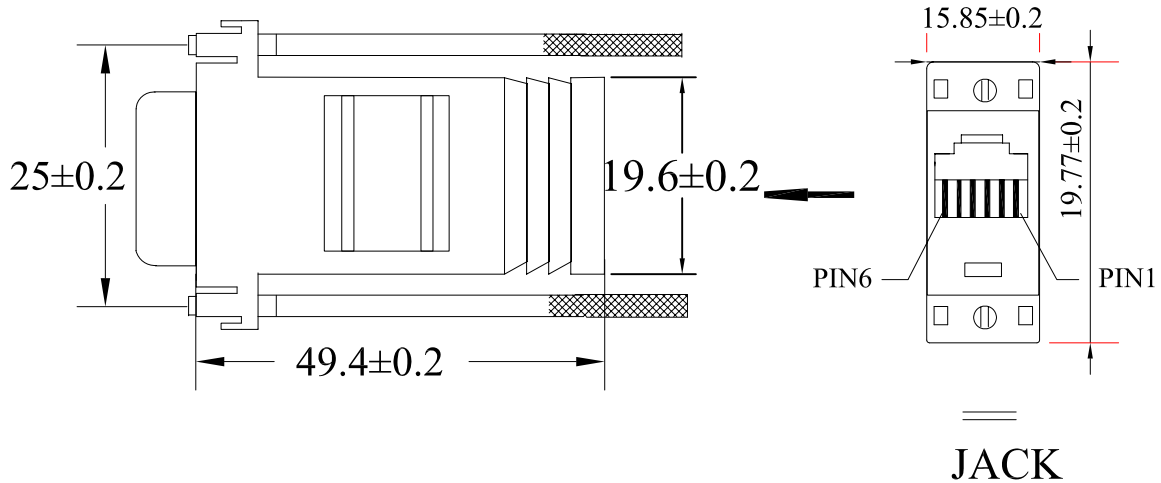

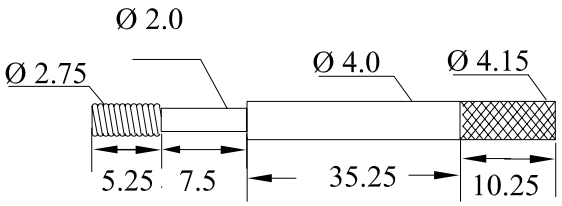

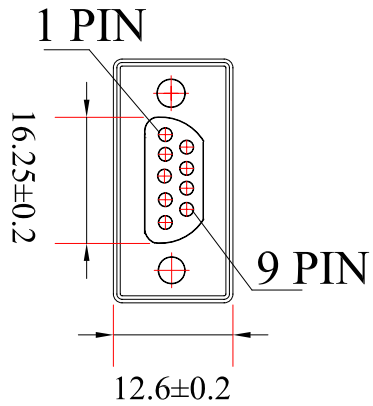

DB9 (F)

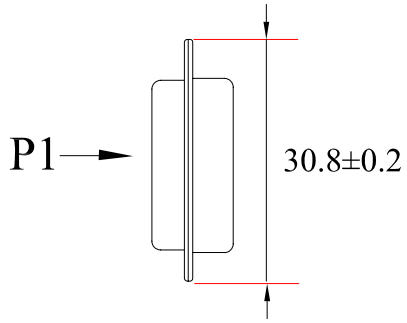

SEC:P

CONFIGURATION:

DB9F		RJ12JACK
7	GREEN	1(f)
5	RED	2(e)
2	BLUE	3(d)
9	BLACK	4(c)
3	WHITE	5(b)
4	YELLOW	6(a)

NOTES:

RoHS COMPLIANT

1. RJ12 JACK ASS'Y SNAP HOOD COLOR: BEIGE (B02)
2. CONNECTOR DB 9F PIN GOLD PLATED 3U" INSULATION: BLACK
3. WIRE UL1061 #26*6C
4. SCREW: #4-40UNC 4*58MM

	Date	Name
Drawn by	Nov.07,07	N.XU
Checked by	Nov.07,07	T.Aufermann
Approved by		

ASSMANN Electronic GmbH

ST80042

Part No.

AT-23065SP-2

Title.

DB9F TO RJ12 JACK

Scale	N/A	Sheet
Unit	MM	1/1